NORDEN MFG

Owner's Manual

Standard Grabber

MADE IN THE USA

Read and Understand the manual. This manual provides information and procedures to safely operate and maintain the Grabber.

CONTENTS

1. INTRODUCTION 4
1.1 .... Intended Usage 4
1.2 .... Operator Orientation 4
1.3 .... Serial Number Location 4
1.4 .... Product Improvements 4
1.5 .... Disposal of Equipment at End of Useful Life ... 4
1.6 .... Unanswered Questions 5
1.7 .... Specifications 5

2. SAFETY 6
2.1 .... General 6
2.2 .... Safety Alert Symbol 6
2.3 .... Safety Icons Nomenclature 7
2.3.1 .. Prohibited Actions 7
2.3.2 .. Hazard Avoidance 7
2.4 .... General Operating Safety 8
2.5 .... Machine's Owner/Operator Manual 8
2.6 .... Practice Safe Maintenance 9
2.7 .... Hydraulic Safety 9
2.8 .... Training 9
2.9 .... Sign-Off Form 10

3. SAFETY SIGNS AND LABELS 11
3.1 .... General Information 11
3.2 .... Contact Information 11
3.3 .... How to Install Replacement Safety Signs 11

4. NOMENCLATURE 13

5. OPERATION 14
5.1 .... User Safety Training 14
5.2 .... Tractor Requirements 14
5.2.1 .. Equipment and Capabilities 14
5.2.2 .. Tractor Safety Devices 14
5.2.3 .. ROPS and Seat Belt 15
5.3 .... Pre-Operation Checklist 15
5.4 .... Attaching to Loader 15
5.5 .... Setup 15
5.5.1 .. Adjustable Crowd Bar 16
5.6 .... Field Operation 16
5.7 .... Detaching From Loader 17

6. TRANSPORTING 18
6.1 .... General Transport Safety 18
6.2 .... Highway and Transport Operations 18
6.3 .... Pre-Transport Checklist 18

7. MAINTENANCE 19
7.1 .... Maintenance Safety 19
7.2 .... Bolt Torque Requirements 20
7.2.1 .. Standard Torque Values 20
7.3 .... Welding Repairs 20

8. STORAGE 21
8.1 .... Placing in Storage 21
8.2 .... Removing from Storage 21

9. PARTS SECTION 22
9.1 .... Ordering Parts 22
9.2 .... Contact Information 22
9.3 .... Decals 22

10. PARTS DETAIL 23
10.1 .. Main Grabber Assembly 23
10.2 .. Hooks 24

1. Introduction

The Standard Grabber picks up bales using hooks mounted on bars.

Please read the manual carefully to become familiar with your new Norden Grabber. This manual has been developed through our experience with the equipment and feedback from our customers. Ultimately it is our desire that you will be operating your Grabber as a seasoned professional in no time!

NOTE: The specific term “Grabber” will be referred to simply as “unit” throughout the rest of this manual and may refer to any of the models covered by this manual. The term skid steer loader or small utility tractor will be referred to as “machine” throughout this manual.

1.1 Intended Usage

Do not use this unit for any other purpose than its intended use of picking up bales that have been arranged into groups with an Accumulator, and moving them to wagons or storage facilities. All Standard Grabbers are rated for 3000 PSI.

1.2 Operator Orientation

The directions left, right, front, and rear, as mentioned throughout this manual, are as seen from the tractor operator’s seat and facing in the direction of travel.

1.3 Serial Number Location

The unit’s serial number is located on the upper right corner of the Grabber Frame. Please use this number when requesting service, seeking information, or ordering parts. Record the serial number in the space provided for easy reference when contacting Norden Mfg LLC with questions.

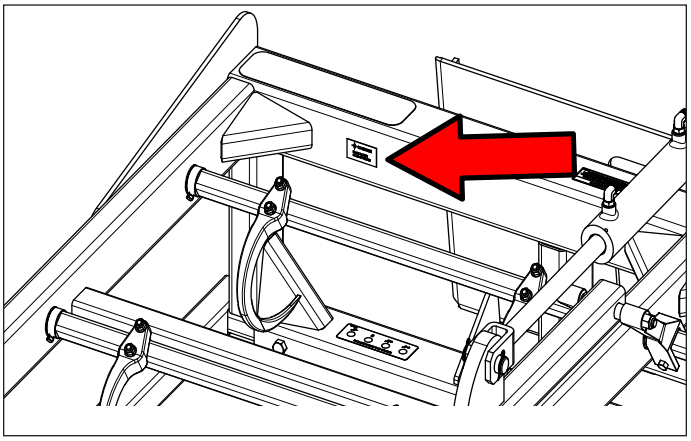

Serial Number _____

Date of Purchase _____

1.4 Product Improvements

Because Norden Mfg LLC maintains an ongoing program of product improvement, we reserve the right to make improvements in design or changes in specifications without incurring any obligation to install them on units previously sold.

1.5 Disposal of Equipment at End of Useful Life

The Norden Mfg. LLC Grabber has been designed for the specific purpose of picking up bales that have been arranged into groups with an Accumulator, and moving them to wagons or storage facilities. When this unit is no longer capable of performing its intended use, it should be dismantled and scrapped. Do not use any materials or components from this unit for any other purpose.

1.6 Unanswered Questions

If you have any questions not answered in this manual, require additional copies, or the manual is damaged, please contact your dealer or:

Norden Mfg LLC
4210 Kinsman Road NW
North Bloomfield, OH 44450

Phone: 877-296-5851
Fax: 440-693-4336

E-mail: parts@nordenmfg.com

The manual is also available for download at:
www.nordenmfg.com

1.7 Specifications

Model	EGF8	408F	510F	612F	615F	510	615	618
Overall Width	68"	72	72	72	87.5	72	72	87.5
Overall Length	72"	72	90	95	95	72	95	95
Overall Height	9”	13	13	13	13	13	13	13
Overall Weight	440 lb.	580 lb	740 lb	760 lb	815 lb	680 lb	780 lb	840 lb
Bale Capacity	8	8	10	12	15	10	15	18
Operating Capacity	1150 lb.	1400	1700	1800	2100	1500	1900	2200
Bale Size	14 x 18” or 16 x 18”, 32 to 38” long	14 x 18” or 16 x 18”, 32 to 38” long	14 x 18” or 16 x 18”, 32 to 38” long	14 x 18” or 16 x 18”, 32 to 38” long	14 x 18” or 16 x 18”, 32 to 38” long	14 x 18” or 32 to 38” long	14 x 18” or 32 to 38” long	14 x 18” or 32 to 38” long

All Standard Grabber Models are rated for 3000 PSI

Specifications subject to change without notice.

NOTE: Operating Capacity suggestion will be determined by the loader and may vary with actual weight of bales. Always operate safely.

2. Safety

2.1 General

Most work related accidents are caused by failure to observe basic safety rules or precautions. An accident can often be avoided by recognizing potentially hazardous situations before an accident occurs. As you operate and maintain the unit you must be alert to potential hazards.

WARNING

Improper operation and/or maintenance of this unit could cause a dangerous situation that results in injury or death.

Do not use the unit until you read and understand the information contained in this manual and all related equipment manuals.

Safety precautions and warnings are provided in this manual and on the unit. If these hazard warnings are not heeded, bodily injury or death could occur to you or to other persons.

Norden Mfg LLC cannot anticipate every possible circumstance that might involve a potential hazard. The warnings in this manual and on the product are, therefore, not all-inclusive. If a method of operation not specifically recommended by us is used, you must satisfy yourself that it is safe for you and for others. You should also ensure that the unit will not be damaged or be made unsafe by the methods that you choose.

The information, specifications, and illustrations in this manual are based on the information that was available at the time this material was written and can change at any time.

2.2 Safety Alert Symbol

This is the safety alert symbol. It is used to alert you to potential personal injury hazards. Obey all safety messages that follow this symbol to avoid possible injury or death.

This manual contains WARNINGS, CAUTIONS, NOTICES, SAFETY INSTRUCTIONS, and NOTES which must be followed to prevent the possibility of improper service, damage to the equipment, personal injury, or death. The following key words call the readers attention to potential hazards.

Hazards are identified by the “Safety Alert Symbol” and followed by a signal word such as “WARNING” or “CAUTION”.

WARNING

Indicates a potentially hazardous situation which, if not avoided, could result in death or serious injury.

CAUTION

Indicates a potentially hazardous situation which, if not avoided, may result in minor or moderate injury.

NOTICE

Indicates that equipment or property damage can result if instructions are not followed.

SAFETY INSTRUCTIONS

Safety instructions (or equivalent) signs indicate specific safety-related instructions or procedures.

NOTE: Contains additional information important to a procedure.

2.3 Safety Icons Nomenclature

This manual and the equipment has numerous safety icons. These safety icons provide important operating instructions which alert you to potential personal injury hazards.

2.3.1 Prohibited Actions

Do not alter or modify

Do not weld

No riders

No children

No alcohol

No drugs

Personal Protection/Important Information

Read the manual

Maintenance procedure

Eye protection

Hearing protection

Hand protection

Foot protection

First aid kit

Fire extinguisher

Inspect equipment

Use proper tools

Place in neutral

Weight rating

Use OEM parts

Use ROPS and seat belt

Maintain safety signs

Place in park

Remove key

Stop engine

Visibility

Check/Maintain fluid levels

Set parking brake

2.3.2 Hazard Avoidance

Crushing hazard

Crushing hazard

Slipping hazard

Tripping hazard

Entanglement hazard

Hot surface

Fire hazard

Safety alert symbol

Zero pressure

Sharp object hazard

Defective or broken part

Maintain safe Distance

Pinch point hazard

Pinch point hazard

Pinch point hazard

Overturn hazard

Tip over hazard

Hose damage hazard

Explosive separation hazard

High pressure fluid hazard

Falling hazard

2.4 General Operating Safety

WARNING

Failure to comply to these safety instructions could result in serious injury or death.

Read, Understand, and Follow the Manual

To prevent personal injury or even death, be sure you read, understand and follow all of the instructions in this manual and other related OEM equipment manuals! This unit was designed for a specific application; DO NOT modify or use this unit for any application other than which it was designed. Units operated improperly or by untrained personnel can be dangerous! Inexperienced operators should receive instruction from someone familiar with the equipment before being allowed to operate the unit.

Do Not Operate

Do not use the unit if it is in need of repair. If you believe the unit has a defect which could cause injury or death, you should immediately stop using the unit.

Fall Hazard

Do not use the unit as a platform. Do not stand on top of the unit at any time. Do not ride on the unit or allow others to ride on it.

Impaired User Hazard

Do not attempt to assemble, operate, or maintain the unit under the influence of drugs or alcohol. Consult your doctor before using the unit while taking prescription medications.

Pinch Hazard

Do not place hands, fingers, or arms between moving parts.

Crush Hazard

DO NOT GO UNDER THE Unit FOR ANY REASON

Stay Clear

Clear the area of people, especially small children, before using the unit. Under no circumstances should young children be allowed to work with or around the unit.

2.5 Machine's Owner/Operator Manual

Always refer to and be familiar with the machines owner's manual to ensure compatibility and maximum safety.

Refer to the Machine's Operator' Manual to make sure the machine use meets the minimum lifting capacity requirements for your unit. Refer to "1.7 Specifications" on page 5.

Operating the unit with a machine that does not meet the following requirements may cause damage to the unit and /or the machine and can be a danger to the operator and passerby.

Machine's Safety Device Requirements

Approved Roll-Over Protective Structure (ROPS) or ROPS cab and seat belt.

Machine Safety Devices; Slow Moving Vehicle (SMV) emblem, lighting, PTO master shield.

To reduce the risk of fire, do not use a machine with an under-frame exhaust.

WARNING

Rollover Hazard

To avoid serious injury or death from falling off the machine, equipment run over, rollover, or crushing: Use ROPS equipped machines.

Keep ROPS locked in the UP position.

Only operate the equipment when seated in the operators seat.

Always fasten seat belt when operating the machine.

Use caution when transporting over uneven terrain and slow down for turns.

The machine must be equipped with a roll over protective structure (ROPS) (cab or roll bar) and seat belt to protect the operator from falling off the machine, especially during a roll-over where the

driver could be crushed and killed. Only operate a machine with the ROPS in the raised position and seat belt fastened.

2.6 Practice Safe Maintenance

SAFETY INSTRUCTIONS

Understand service procedures before doing any work. Keep the work area clean and dry.

Keep all parts in good working condition and properly installed Replace worn or broken parts immediately.

Do not modify the unit or its safety devices. Do not weld on the unit. Unauthorized modifications may impair its function and safety.

2.7 Hydraulic Safety

WARNING

High-Pressure Fluid Hazard

Hydraulic fluid escaping under pressure can penetrate the skin. Openings in the skin and minor cuts are susceptible to injection from hydraulic fluid. If injured by a concentrated high-pressure stream of hydraulic fluid, seek medical attention immediately. Without immediate medical treatment, serious infection or toxic reaction can develop if hydraulic fluid penetrates the surface of the skin.

Hose Damage Hazard

Before applying pressure to the system, make sure all components are tight and that the hydraulic lines hoses, and couplings are not damaged. Replace any worn, cut, abraded, flattened, or crimped hoses.

Personal Protective Equipment

Wear proper hand and eye protection when searching for a high-pressure hydraulic leak. Use a piece of wood or cardboard as a backstop instead of hands to identify and isolate a leak.

Trapped Air Hazard

When installing, replacing, or repairing hydraulic system cylinders or parts, make sure that the entire system is charged and free of air before resuming operations. This can be done by cycling the unit a few times before starting to use the unit.

Explosive Separation Hazard

Do not make any temporary repairs to the hydraulic lines, fittings, or hoses using tape, clamps, or adhesives. The hydraulic system operates under extremely high pressure and temporary repairs may fail suddenly and create a hazardous/dangerous situation.

NOTICE

Make sure components in the hydraulic system are kept clean and in good working condition

The Most common reason for hydraulic component failure is contamination of the oil. Keep all hydraulic access areas completely clean, such as around the hydraulic oil filler cap, filter, and connection points. Replace any fittings, hoses or other components where leakage is observed. Clean up any spilled hydraulic oil.

2.8 Training

Anyone who will be using and/or maintaining the unit must read, clearly understand, and follow ALL safety, operation, and maintenance information presented in this manual, other related OEM manuals, and the safety signs.

If you do not understand any information in this manual, see your dealer or contact Norden Mfg LLC before proceeding.

Do not use or allow anyone else to use this unit until all information has been reviewed. Annually review this manual before the season start-up.

SAFETY INSTRUCTIONS

Make periodic reviews of SAFETY and OPERATION a standard practice. An untrained operator is not qualified to use this unit.

2.9 Sign-Off Form

Norden Mfg LLC follows the general Safety Standards specified by the Farm Equipment Manufacturers Association (F.E.M.A.), and the American National Standards Institute (ANSI). Anyone who will be using and/or maintaining the unit must read and clearly understand ALL safety, operation and maintenance information presented in this manual.

This sign-off sheet is provided for your records to show that all personnel who will be working with the equipment have read and understand the information in this Operation and Parts Manual and have been instructed in the operation of the equipment.

Sign-Off Form		
Date	**User's Signature**	**Owner's Signature**

3. Safety Signs and Labels

3.1 General Information

The types of safety signs (hazard labels) and instructional labels, along with their locations on the equipment, are shown in the following illustrations. Good safety practices require that you familiarize yourself with the various safety signs, the type of warning, and the area or particular operation related to that area that requires your SAFETY AWARENESS.

Think SAFETY!

Work SAFELY!

Pay close attention to the safety signs and instructional labels attached to the machine and unit. If the unit is missing a label or one is unreadable, replace the label before using the unit.

Replacement parts that displayed a safety decal should also display the current sign. Replacement safety decals are available from your authorized dealer or factory at no cost.

SAFETY INSTRUCTIONS

Safety and Instructional Decals

1. **Keep safety signs or instructional labels clean and legible at all times. Use a clean, damp cloth to clean safety decals.**
2. **Replace any missing or hard-to-read safety signs or instructional labels.**
3. **Use care when washing or cleaning the equipment not to remove or damage the labels. When using a pressure washer to clean the unit, avoid spraying too close to decals; high-pressure water can enter through very small scratches or under edges of decals causing them to peel or come off.**
4. **Locations for the labels and replacement part numbers are shown in this section.**
5. **Replacement parts must have replacement labels attached before the unit is used.**
6. **Labels are available from your authorized dealer or from Norden Mfg LLC at no charge.**

3.2 Contact Information

For replacement decals, contact:

Norden Mfg LLC
4210 Kinsman Road NW
North Bloomfield, OH 44450

Phone: 877-296-5851
Fax: 440-693-4336

E-mail: parts@nordenmfg.com

3.3 How to Install Replacement Safety Signs

Clean and dry the installation area.

Note: Do not install the signs if the temperature is below 50°F.

Determine the exact position before you remove the backing paper.

Remove the backing paper.

Align the sign over the specified area and carefully press the sign to the part/frame.

NOTE: Small air pockets can be pierced with a pin and smoothed out using the piece of backing paper or plastic card.

Safety Sign Locations

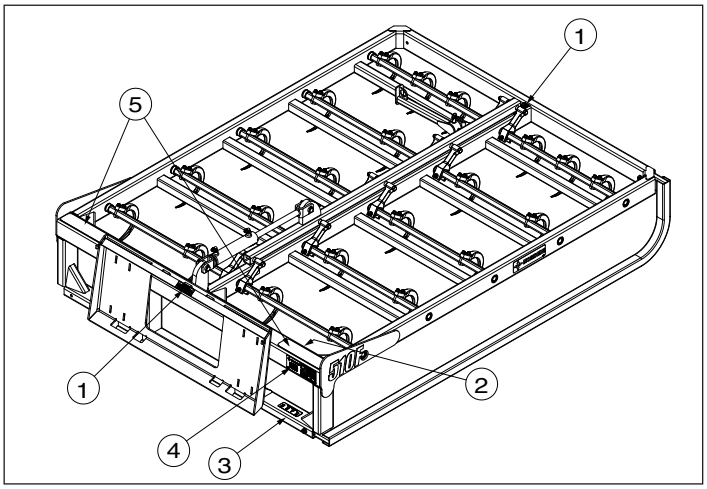

Item	Type	Description	Qty.
1	WARNING	No Riders	2
2	INFORMATIONAL	Serial Number	1
3	INFORMATIONAL	Crowd Bar Adjustment	1
4	INFORMATIONAL	Manufacture Placard	1
5	SAFETY	Anti Slip Tape	2

NOTE: Safety symbols are shown in the same position on every model.

Safety Signs

1. WARNING—1029530 No Riders

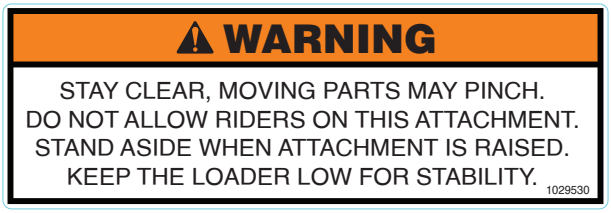

2. INFORMATIONAL—Serial Number

3. INFORMATIONAL—1034020 Crowd Bar Adjustment

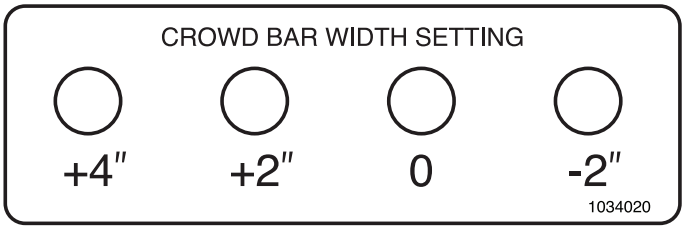

4. INFORMATIONAL—1024360 Manufacturing 3.0

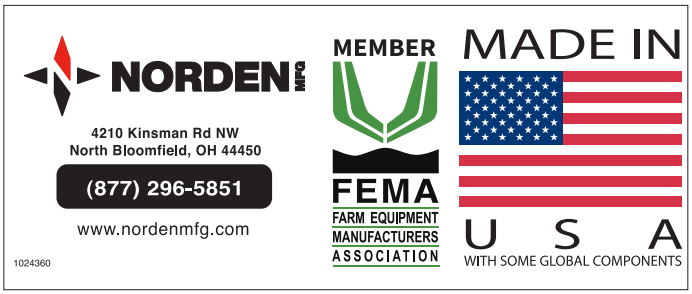

5. SAFETY—1024380 Anti Slip Tape

No picture

4. Nomenclature

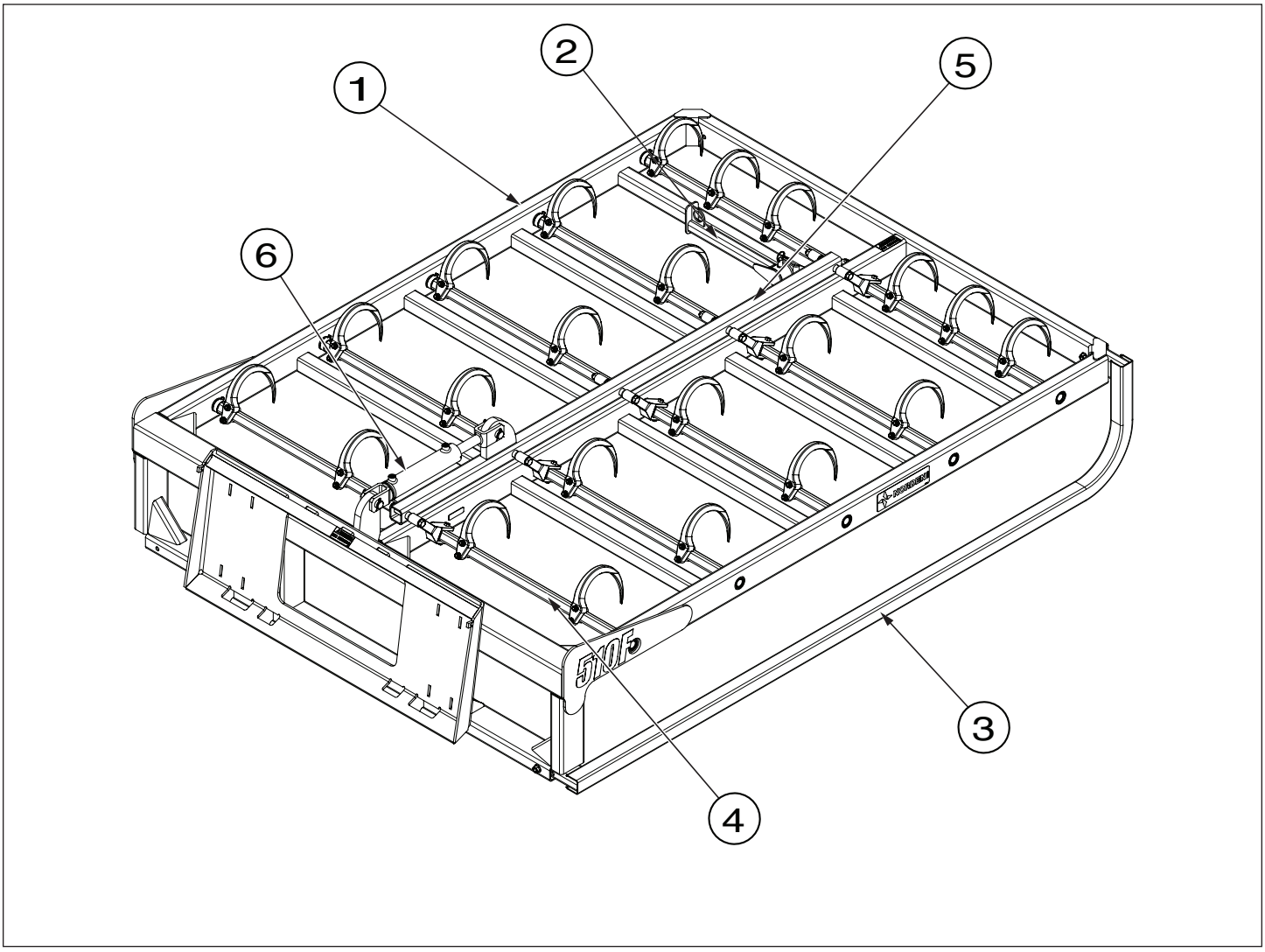

Item	Description
1	Frame Assembly
2	Stand
3	Crowd Bar
4	Hook Shaft Assembly
5	Center Bar
6	Hydraulic Cylinder

5.1 User Safety Training

Refer to “2.4 General Operating Safety” on page 8 for user safety training requirements.

WARNING

Roll Away Hazard

Before leaving the operator’s seat, make sure the engine is stopped, the transmission is placed in park, the key is removed, and the parking brake is set.

The weight of the tractor, plus the implement, if it rolls onto a person, could cause serious crushing injury or death.

Crush Hazard

The tractor should be equipped with a Roll Over Protective Structure (ROPS) and a seat belt. A crushing hazard could occur if the operator is ejected from the seat while the tractor is in motion. Fasten the seat belt whenever the tractor is moving.

Keep hands and clothing clear of moving parts. Do not clean, lubricate or adjust your equipment while it is moving.

SAFETY INSTRUCTIONS

The following safety instructions are provided to help prevent injury or limit equipment damage.

Train Unfamiliar Users

It is the owner’s responsibility to make sure any person using the unit, especially if it is loaned or rented, has been thoroughly trained on its proper and safe use.

Be certain only physically-able persons will use the unit.

Users who have not read and understood all operating and safety instructions are not qualified to use the unit.

If the elderly are assisting with the work, their physical limitations need to be recognized and accommodated.

Never allow children to operate equipment.

5.2 Tractor Requirements

Tractor Owner/Operator Manual

Always refer to the tractor owner’s manual to ensure compatibility and maximum safety.

Refer to the tractor or skid loader Operator’s Manual to make sure the loader used has the power to lift the unit and bales.

Operating the equipment with a loader that does not meet the following requirements may cause tractor or implement damage and be a potential danger to the operator and bystanders.

Always review the “controls” section of the tractor or skid loader operator’s manual to be familiar with the location, settings, and function of the controls. Be familiar with all controls before using this equipment.

5.2.1 Equipment and Capabilities

- Approved Roll-Over Protective Structure (ROPS) or ROPS cab and seat belt.
- Tractor Safety Devices; Slow Moving Vehicle (SMV) emblem, lighting, PTO master shield.
- Universal quick-attach system on skid loader, or tractor front end loader with quick-attach adapter.
- To reduce the risk of fire, do not use a tractor with an under-frame exhaust.

5.2.2 Tractor Safety Devices

If transporting the tractor and unit on a public roadway, the tractor must be equipped with proper warning lighting and a Slow Moving Vehicle (SMV) emblem which are clearly visible from the rear of the unit.

Maintain all manufacturer equipped safety shields and guards. Always replace shields and guards that were removed for access to connect, service, or repair the tractor or implement. Never operate the tractor PTO with the PTO master shield missing or in the raised position.

5.2.3 ROPS and Seat Belt

WARNING

Rollover Hazard
To avoid serious injury or death from falling off tractor, equipment run-over, rollover, or crushing:

Use ROPS equipped tractor or skid loader.

Keep ROPS locked in the UP position.

Only operate the equipment when seated in the tractor seat with seat belt fastened.

Use caution when transporting over uneven terrain and slow down for turns.

The tractor or loader must be equipped with a Roll Over Protective Structure (ROPS) (cab or roll bar) and seat belt to protect the operator from falling off the tractor, especially during a roll-over where the driver could be crushed and killed. Only operate the tractor with the ROPS in the raised position and seat belt fastened.

5.3 Pre-Operation Checklist

Before each use of the unit, the following areas should be checked.

Checklist Before Each Use	
✓	Task
	Make sure the unit is positively attached to the loader. Refer to “5.4 Attaching to Loader” on page 15.
	Make sure that the tractor or loader tires are inflated properly and the lug nuts are tight.
	Visually inspect the unit for any loose bolts, worn parts or cracked welds, and make necessary repairs.
	Make sure all retainer clips and pins are in place.
	Check all hydraulic hoses and connections for damage or evidence of leaks.
	Make sure the operating area is clear, especially of children and animals.

5.4 Attaching to Loader

CAUTION

Pinch Point Hazard
Use caution when connecting the unit to the loader. Keep hands and feet from under the equipment and clear of pinch points.

1. Attach the unit to a loader using the Quick Attach.
2. Connect the hydraulic hoses to the desired ports.
3. Operate the bale hooks throughout their range of travel several times to purge the air from the lines.
4. Check the hydraulic fluid reservoir and fill if necessary.

NOTICE

The unit does not have a hydraulic reservoir and therefore can deplete the tractor or skid loader’s oil reservoir during initial charging of the cylinder. After this initial setup, check the hydraulic oil reservoir and add oil as necessary.

5.5 Setup

WARNING

Roll Away Hazard
Never leave equipment running unattended. When halting operation, even for a short time, set the tractor or skid loader brakes, shut off the engine and remove the ignition key.

SAFETY INSTRUCTIONS

Be especially observant of the operating area and terrain – watch for loose fill, holes, rocks or other hidden hazards. Always inspect the area prior to operation.

Pick the most level route when transporting across fields. Avoid the edges of ditches or gullies and steep hillsides. Be extra careful when working on inclines.

Maneuver the tractor or skid loader at safe speeds.

Allow for unit length when making turns.

5.5.1 Adjustable Crowd Bar

To accommodate different bale widths, the crowd bar has four position settings with a total range of adjustment of six inches.

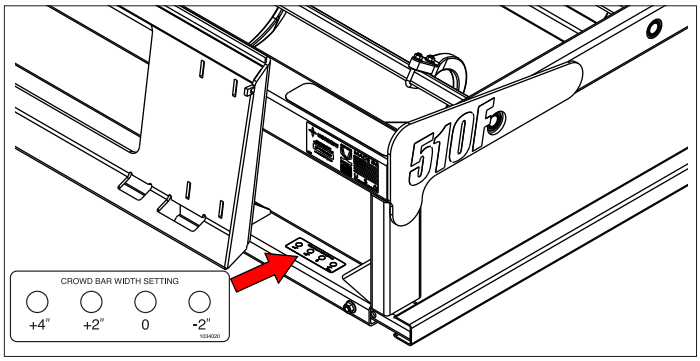

To set the crowd bar for your bale width, remove the 1/2 x 4.5” bolt, 12 x 2.5” Bolt and flange nuts.

Slide the crowd bar in or out to the desired position, and align to the closest set of holes.

Default to the “0” position. Crowd Bar may have been set to the “-2” position for shipping.

Replace the bolts and lock nuts.

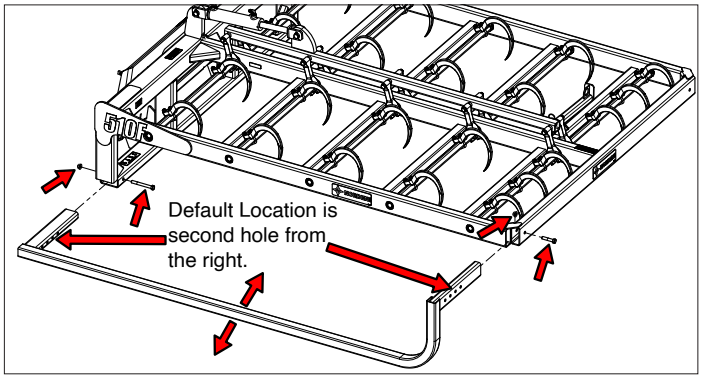

5.6 Field Operation

Angle into the bales and turn so the bales are simultaneously pushed forward and sideways.

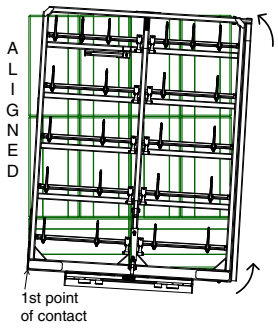

1. Position the loader to pick bales with the rear of the unit.

2. Place the crowd bar against the right side of the row of bales and the unit frame against the rear. If necessary, push the row forward slightly to align the bales.

3. Lower the unit onto the bales, engage the hooks, and lift the bales.

5.7 Detaching From Loader

Use caution when disconnecting the unit from the loader. Keep hands and feet from under the equipment and clear of pinch points between the loader and Unit.

⚠ WARNING

Crush Hazard
Do not allow anyone to stand between the loader and Unit during hook-up operations.

- Park the tractor or loader, place the transmission in park or neutral, apply the parking brake, shut down the engine, and remove the key. Wait for all motion to come to a complete stop before exiting the tractor.
- Remove the stand retaining pin, rotate the stand to its deployed position, and re-install the pin.
- Lower the unit to the ground or onto blocks.
- Disconnect the hydraulic couplers and detach the unit from the tractor or loader. Place the hoses on top of the unit, do not allow them to lay on the ground.
- Board the tractor or loader and start the engine. Drive the tractor or loader away.

6. Transporting

6.1 General Transport Safety

SAFETY INSTRUCTIONS

Before transporting make sure the tractor or loader used is in the good operating condition according to the OEM user's manual.

When transporting the unit on a roadway, make sure that the tractor or loader has a clearly visible "Slow Moving Vehicle" (SMV) placard.

Make sure that the area is clear of children, animals, people and other obstacles before moving the unit. This is particularly important with higher noise levels and quiet cabs as you may not hear people shouting.

Do not allow anyone to ride on the tractor or the unit.

6.2 Highway and Transport Operations

SAFETY INSTRUCTIONS

Always drive at a safe speed relative to conditions and ensure that your speed is low enough for an emergency stop to be safe and secure. Keep speed to a minimum.

- Reduce speed prior to turns to avoid the risk of overturning
- Always keep the tractor or loader in gear to provide engine braking when going downhill. Do not coast.
- Make sure when transporting with a truck or trailer to secure the unit to the transport and to move the jack stand to the weight bearing position.
- Use approved accessories lighting, flags, or other necessary warning devices to protect operators of other vehicles on the highway during daylight and nighttime transport. Various safety lights and devices are available from your dealer.
- Be a safe and courteous driver. Always yield to oncoming traffic in all situation, including narrow bridges, intersections, etc. Plan your route to avoid heavy traffic.
- Watch for overhead obstructions and side clearances while transporting.
- Always operate equipment in a position to provide maximum visibility at all times. Make allowances for increased operating length and weight, when making turns, stopping, etc.

6.3 Pre-Transport Checklist

✓	Task
	Before transporting, make sure the maintenance on the tractor or loader are current.
	Check the tire pressures on the tractor or loader and correct if necessary.
	Make sure the unit is securely attached to the tractor or loader. Always inspect the unit and the bracket for damage, abnormal wear, or excessive wear when hooking up.
	Prior to transporting on a roadway, have an observer confirm that all running lights, brake lights, turn signals, and hazard lights are working.
	Verify the brakes operate correctly.

7. Maintenance

7.1 Maintenance Safety

WARNING

Failure to comply with the following safety instructions could result in serious injury and possibly even death.

Personal Protection Equipment

Wear close fitting and belted clothing to avoid getting caught in moving parts. Wear personal protection equipment (PPE), which may include safety glasses, safety shoes, gloves, etc. appropriate for the work site and working conditions.

Damaged Parts Hazard

Do not use the unit if any parts are damaged. If the unit is believed to have a defect which could cause it to work improperly, immediately stop using it and remedy the problem before continuing.

No Unauthorized Modifications

Do not modify the unit or safety devices. Do not weld on the unit. Unauthorized modifications may impair the unit's function, or create safety hazards, and will void the warranty.
If the unit has been altered in any way from the original design, the manufacturer does not accept any liability for injury or warranty.

Crush Hazard

Always set the unit on blocks or on the ground when performing maintenance.

Good Working Condition

Keep all parts in good condition and properly installed. Fix damage immediately. Replace worn or broken parts.

Replacement Parts

If replacement parts are necessary, genuine factory replacement parts must be used to restore the unit to its original specifications. Unapproved parts could create a safety hazard. The manufacturer will not accept responsibility for damages as a result of the use of unapproved parts.

SAFETY INSTRUCTIONS

The following safety instructions are provided to help prevent injury or limit equipment damage.

A first aid kit should be readily accessible while performing maintenance on this equipment.

Do not leave tools lying around the work area. Follow good shop practices. Keep service area clean and dry. Be sure electrical outlets and tools are properly grounded. Use adequate light.

Use the correct tools, jacks, hoists, or other tools that have the capacity for the job.

Good maintenance is your responsibility. Poor maintenance shortens equipment life and is an invitation for problems.

Before working on this unit, stop the loader, set the brakes, lower the unit to the ground or onto blocks, shut off the engine, and remove the ignition key. After servicing, be sure all tools, parts and service equipment are removed. Never replace hex bolts with less than grade five bolts. Where replacement parts are necessary for periodic maintenance and servicing, genuine factory replacement parts must be used to restore your equipment to original specifications. The manufacturer will not claim responsibility for use of unapproved parts and/or accessories and other damages as a result of their use.

If equipment has been altered in any way from original design, the manufacturer does not accept any liability for injury or warranty.

7.2 Bolt Torque Requirements

WARNING

Equipment Failure
The proper torque value for bolts and cap screws is identified by their head markings. Replacing higher "Grade" bolts (Grade 5) with lower Grade bolts will lead to equipment failure and could result in injury or death. Always use replacement bolts with the same Grade markings as the removed bolt.

It is extremely important to apply and maintain proper torque on all bolts. Use a torque wrench to assure the proper amount of torque is being applied to the fastener.

Start all bolts or nuts by hand to prevent cross threading.

Torque figures indicated in the chart are used for non-greased or non-oiled threads unless otherwise specified. Therefore, do not grease or oil bolts or cap screws unless otherwise specified in this manual. When using locking elements, increase torque values by 5%.

The chart gives correct torque values for various bolts and cap screws. Tighten all bolts to the torque specified in the chart unless otherwise noted. Check tightness of bolts periodically, using the bolt torque chart as a guide. Always replace hardware with the same Grade bolt.

7.2.1 Standard Torque Values

Bolt Diameter	English Bolt Torque Specifications					
	Grade 5		Grade 8		ASTM A574	
	3 Radial Lines Grade 5		6 Radial Lines Grade 8		Socket Head Cap Screw	
	ft.lbs.	N·m	ft.lbs.	N·m	ft.lbs.	N·m
1/4"	9	12	12	17	14	18
5/16"	19	25	27	36	29	38
3/8"	33	45	45	63	51	69
7/16"	53	72	75	100	81	109
1/2"	80	110	115	155	124	168
9/16"	115	155	165	220		
5/8"	158	215	220	305	238	322
3/4"	290	390	398	540	423	573
7/8"	420	570	650	880	682	924
1"	630	850	970	1320	1022	1385

7.3 Welding Repairs

Before performing any type of welding repair to the unit, contact Norden Mfg LLC for approval. Repair welding must be done with care and with procedures that may be beyond the capabilities of the ordinary welder.

WARNING

Personal Injury Hazard
Repairs or modifications to the Unit could result in serious injury or death should these repairs fail.

NOTICE

Anyone performing a welding repair should be certified in accordance to the American Welding Society (AWS) standards.

8. Storage

⚠ WARNING

Not following these safety instructions could result in serious injury and possible death.

Read and understand the Operator's Manual and all safety signs before moving the unit.

Do not permit anyone, especially children to play on or around the stored unit.

Store the unit in an area away from human activity.

Do not store the unit where it will be exposed to livestock for long periods of time. Damage and livestock injury could result.

8.1 Placing in Storage

1. Release all bales from the unit, and lower the bale hooks.
2. Thoroughly wash the unit with a pressure washer or water hose to remove all loose hay, dirt, mud, or debris.
3. Lubricate all grease points. Make sure all grease cavities have been filled with grease to displace any trapped water from washing.
4. Select an area that is dry, level, and free of debris (inside a building is ideal). Move the Unit to its storage area.
5. Remove the stand retaining pin, rotate the stand to its deployed position, and re-install the pin.
6. Lower the unit to the ground or onto blocks.
7. Disconnect the hydraulic couplers and detach the unit from the tractor or loader. Place the hoses on top of the unit, do not allow them to lay on the ground.
8. Touch up all paint nicks and scratches to prevent rusting.

8.2 Removing from Storage

1. Attach the unit to the loader following the procedure in "5.4 Attaching to Loader" on page 15.
2. Remove the stand retaining pin, rotate the stand to its storage position, and re-install the pin.
3. Before placing the unit back into service, replace any worn or defective parts and perform the"5.3 Pre-Operation Checklist" on page 15.

9. Parts Section

9.1 Ordering Parts

We manufacture a quality product that requires very little maintenance or repair. However, should a part break or become damaged, our knowledgeable staff can make sure you receive the part(s) to put your unit back into operation.

9.2 Contact Information

For replacement decals, questions, or to order parts, contact:

Norden Mfg LLC
4210 Kinsman Road NW
North Bloomfield, OH 44450

Phone: 877-296-5851
Fax: 440-693-4336

E-mail: parts@nordenmfg.com

9.3 Decals

⚠ WARNING

To prevent serious injury or death which could result from not following posted safety instructions, make sure all decals are attached to the unit and are legible at all times.

Safety decals provide a vital role in helping to reduce injuries and/or possibly even death. To ensure the greatest level of safety, all decals must be in place and legible at all times. Remember, it is the users responsibility to maintain these decals.

Replacement safety decals are available from Norden Mfg. at no charge.

10. Parts Detail

10.1 Main Grabber Assembly

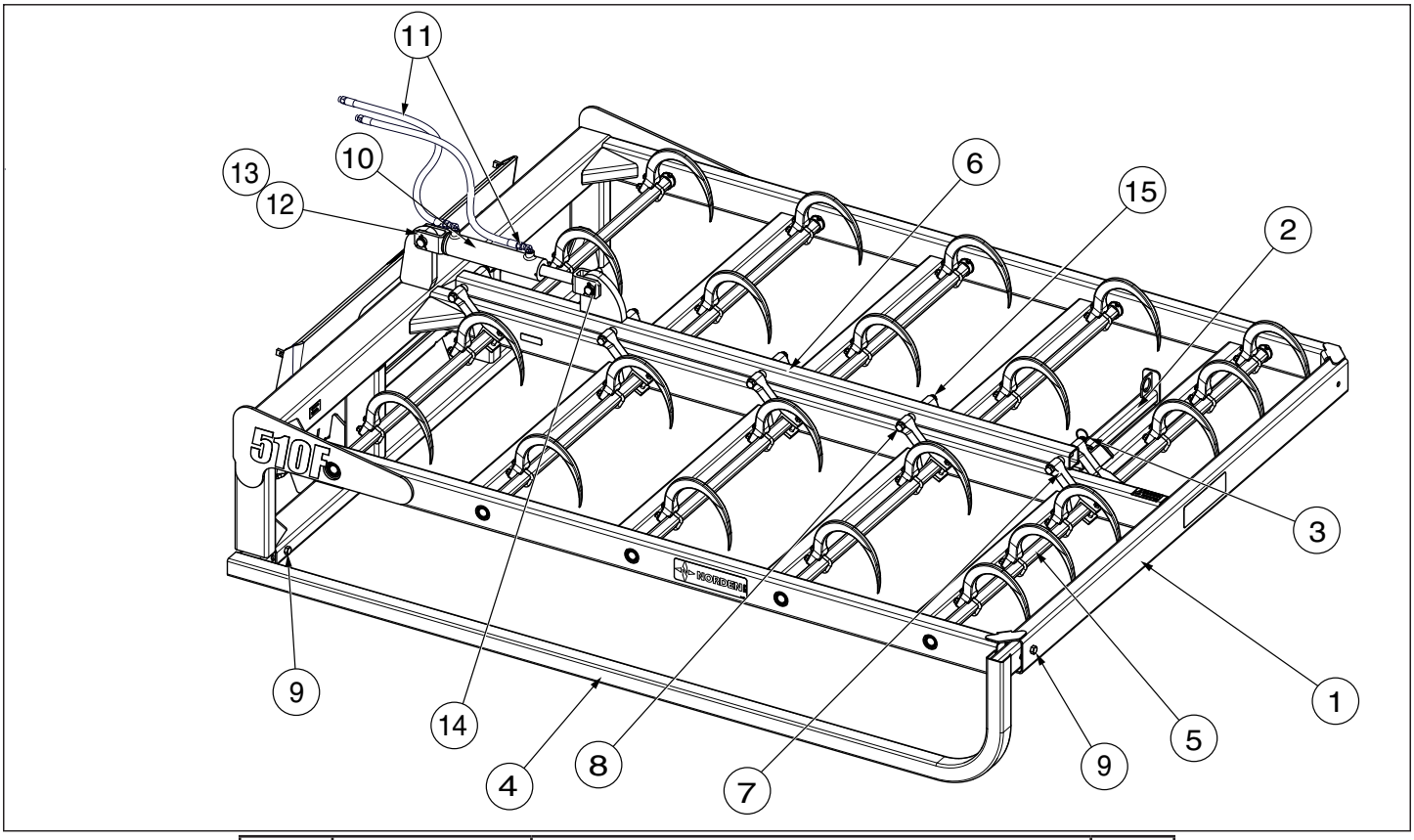

Item	Part Number	Description	Qty
1	1000020	Frame Assembly	1
2	1000380	Stand	1
3	1005690	Pin, Retainer,	1
4	1000040	Crowd Bar	1
5	1005450	Grabber Hook Tube, 31.5”	4-12
	1005460	Grabber Hook Tube, 33.5”	
	1005470	Grabber Hook Tube, 41”	
6	1000050	Bar, Center	2
7	1005710	Actuator Arms	8-12
8	1006270	Bolt, Hex, 1/2 x 7” Grade 5	4-6
9	1010710	Crowd Bar Hardware Kit	1
	1006890	Bolt, Hex, 1/2 x 4.5” Grade 5	1
	1006900	Bolt, Hex, 1/2 x 2.5” Grade-5	1
	1006210	1/2” Serrated Flange Nut	2
10	1000360	Hydraulic Cylinder, 2 x 8”	1
11	1006800	Hose Kit, Hydraulic, 3/8” x 6’	1
	1007020	Fitting, Hydraulic, 90 deg, 3/8” NPTF	2
12	1006780	Pin, Clevis	1
13	1006790	Pin, Retaining	2
14	1000060	Tube, Cylinder Mount	1
15	1006110	Nut, Lock, Nylon, 1/2-13	4

10.2 Hooks

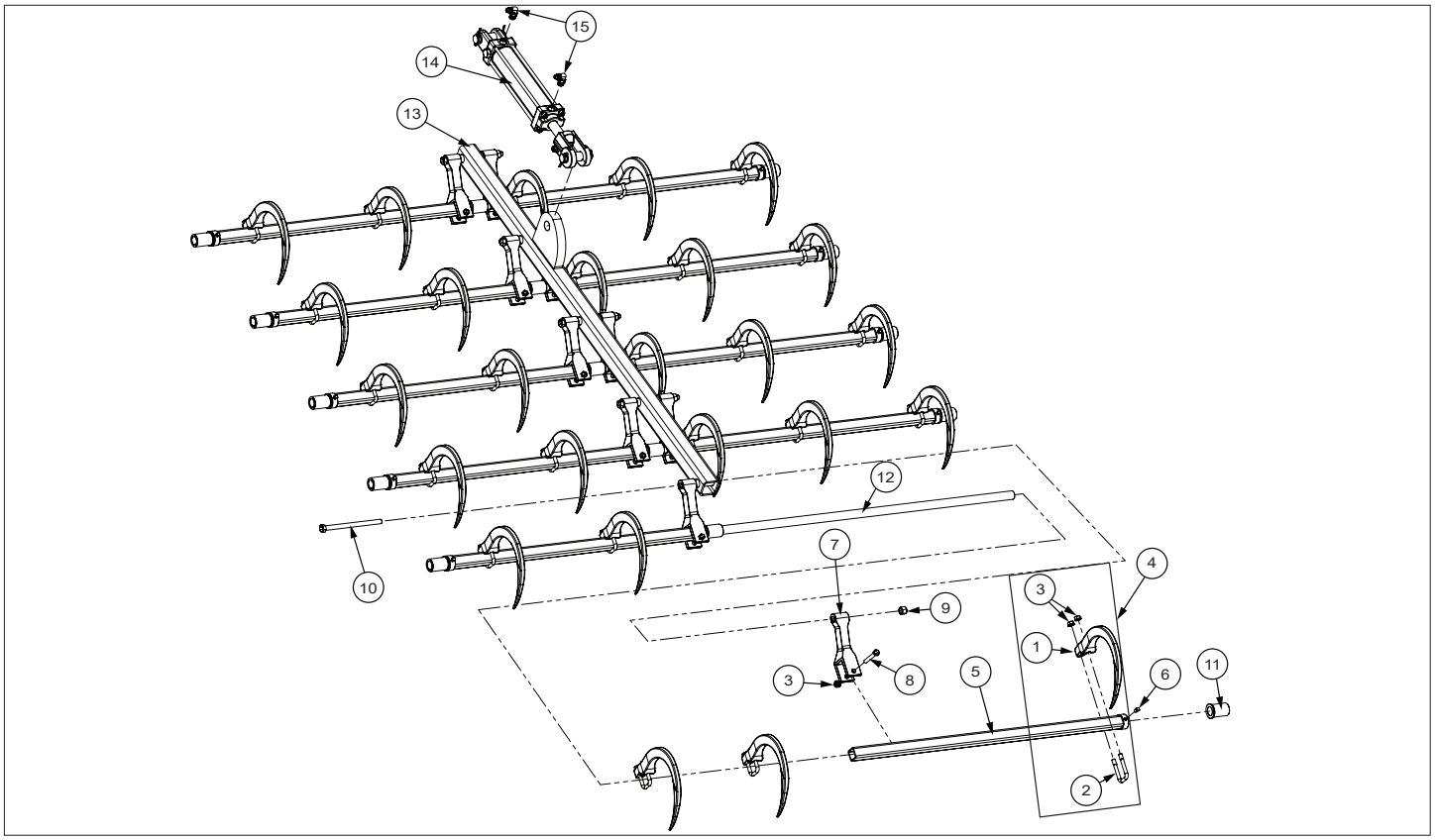

Item	Part Number	Description	Qty
1	1005721	Bale Hook	16-36
2	1006881	Grabber Hook U-bolt	16-36
3	1006190	3/8" Serrated Flange Nut	40-84
4	1017460	Grabber Hook with U-bolt	16-36
5	1005450	Grabber Hook Tube, 31.5"	4-12
	1005460	Grabber Hook Tube, 33.5"	
	1005470	Grabber Hook Tube, 41"	
6	1006870	Square Head Set Bolt, 5/16”-18 X 1/2”	8-12
7	1005710	Actuator Arm	8-12
8	1006860	3-8 16 x 2.5 Hex Bolt Grade 5	8-12
9	1006110	1-2 13 Nylock Nut Grade 5	4-6
10	1006270	1-2 13 x 7 Hex Bolt Grade 5	4-6
11	1005700	UHMW Bushing	12-18
12	1005430	Grabber shaft, 71.75"	4-6
	1005440	Grabber shaft, 88 7/8"	
13	1005340	408F Center Bar	1
	1005350	510 Center Bar	
	1005360	510F Center Bar	
	1005370	615, 618 Center Bar	
	1005380	615L, 618L Center Bar	
14	1000360	2x8 ASAE Hydraulic Cylinder	1
15	1009690	3/8" 90° Hydraulic Fitting	2

No

Content

No

Content

No

Content

Norden Mfg LLC
4210 Kinsman Rd NW
North Bloomfield, OH 44450

(877) 296-5851
www.nordenmfg.com
support@nordenmfg.com

Norden Mfg is the successor to Kuhns Mfg and all liability and warranty claims are transferable.

1034930 Rev. C
Revised 2026